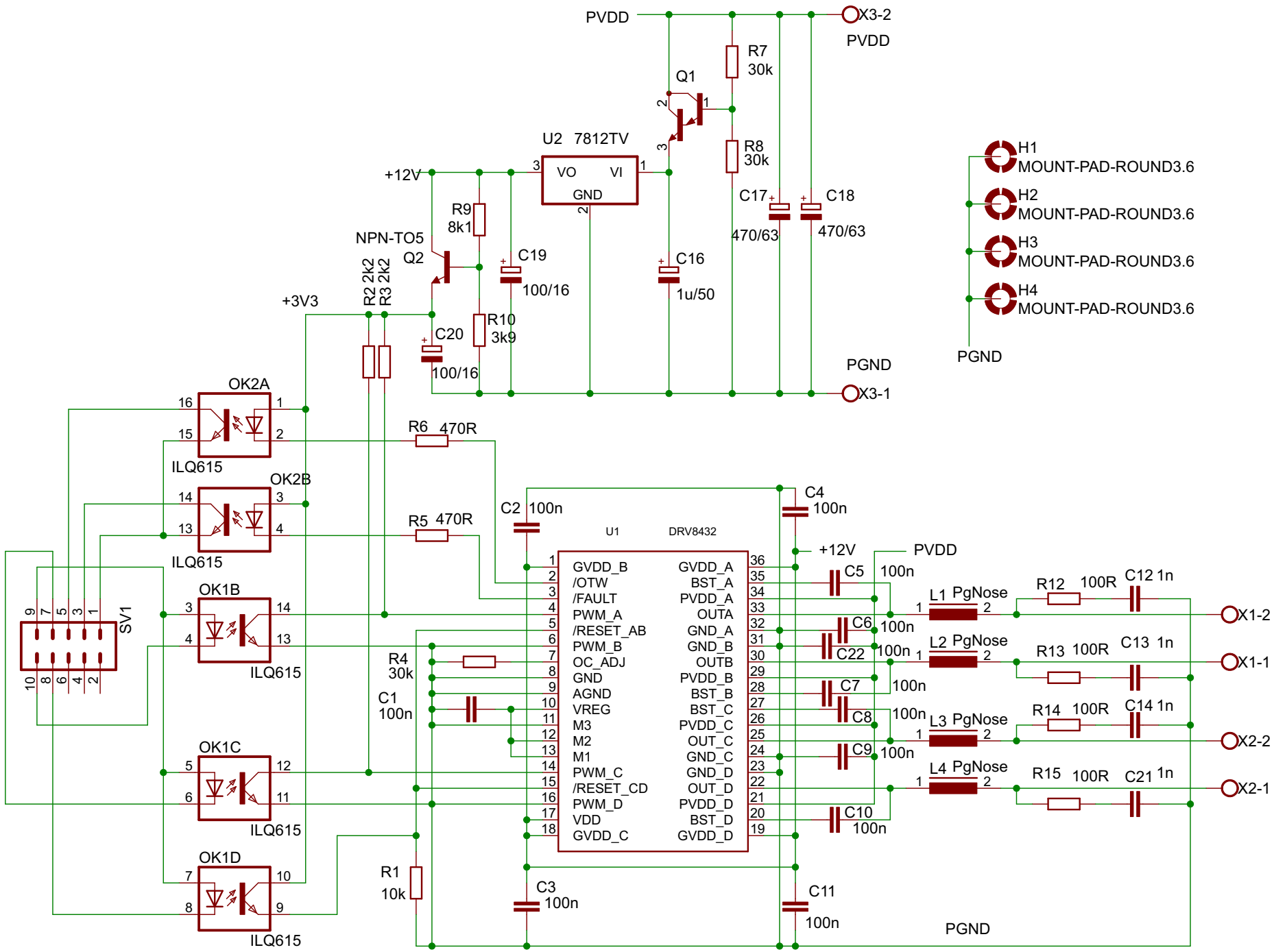

29-11-2013 10:20:44 f=1.20 E:\Projecten\2x_Meten_Gereedschap\2200__ONDERHANDEN\2215_MotorDrives\BrushedDC\Print_BDCM-1\BDCM-1.sch (Sheet: 1/1)